NC SERIES

WC back-to-wall, washdown

DE: WC bodenstehend, Back-to-Wall, Tiefspüler
FR: WC sur pied, à alimentation séparée avec sortie horizontale
IT: Vaso Back-to-Wall, a cacciata, con scarico orizzontale
RU: Унитаз настенный

PRODUCT DETAILS	
Product code	CW763Y
EAN code	40 50663 09293 1
Size	w:380xd:630xh:483 (mm)
Weight	
Colour	White
Material	Ceramic
Technologies	Tornado Flush, CeFiONtect, Rimless Design, Water saving

CAN BE COMBINED WITH:	
NC WC seat	VC100, VC100U10

Weights and measurements shown may be subject to small variations or are indicative.
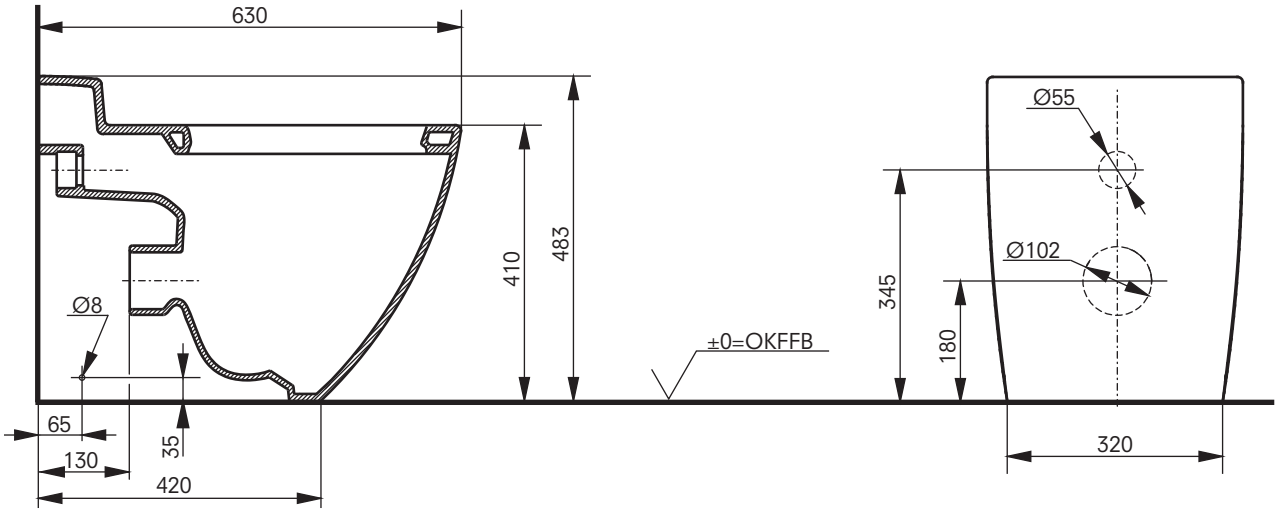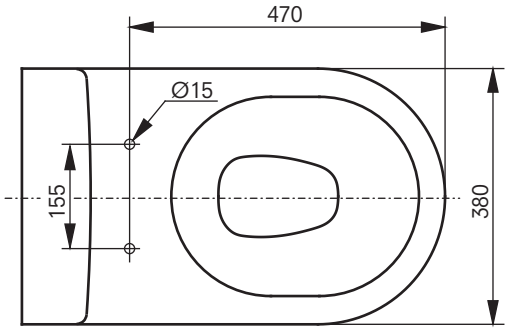
TECHNICAL DRAWINGS